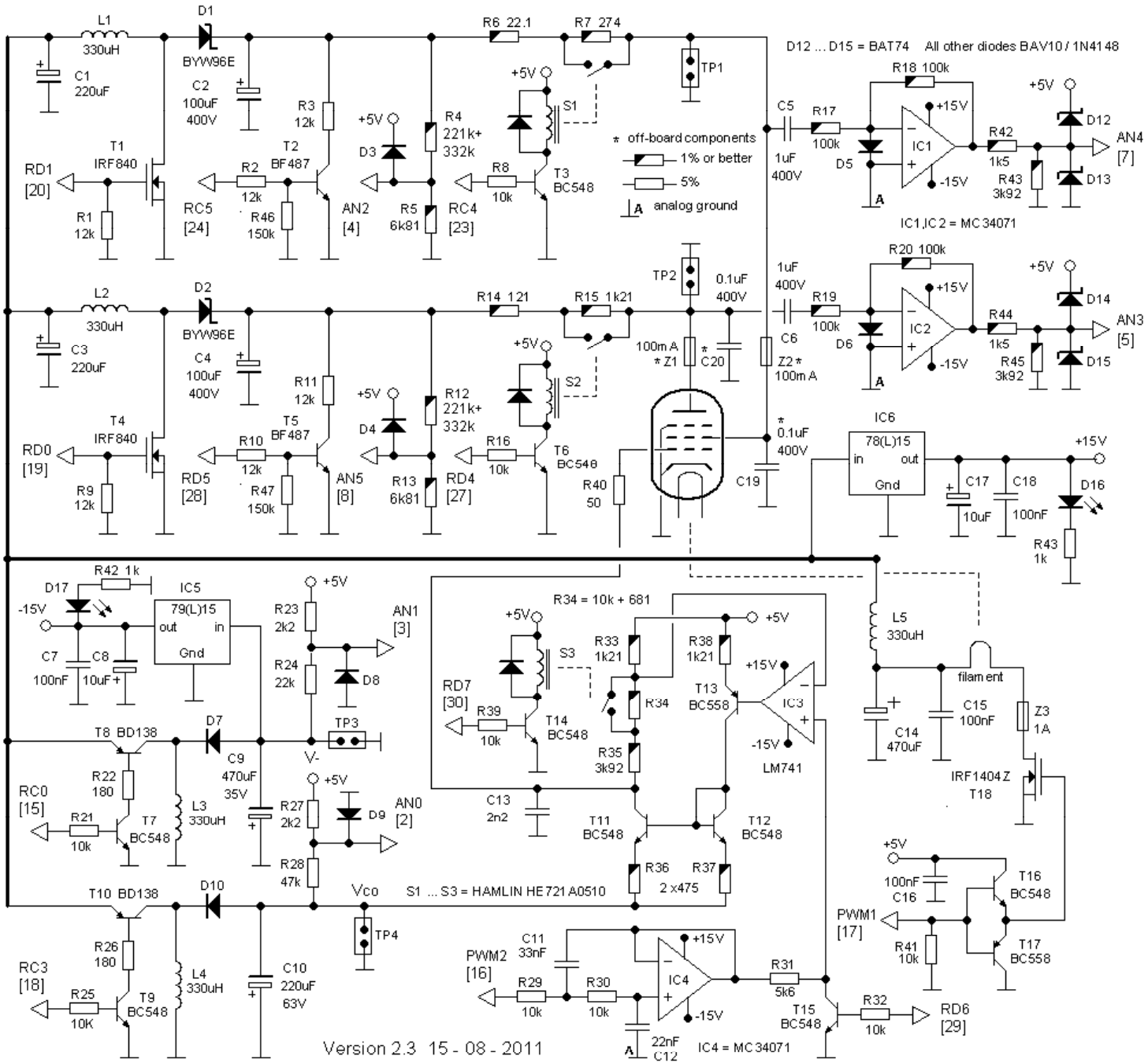
L1
330uH
C1
220uF
D1
BYW96E
C2
100uF
400V
R3
12k
R6 22.1
R7 274
TP1
D12 ... D15 = BAT74 All other diodes BAV10 / 1N4148
R18 100k
+5V
D12
AN4
[7]
D13
C5
1uF
400V
R17
100k
D5
IC1
+15V
-15V
R42
1k5
R43
3k92
IC1,IC2 = MC34071
T1
IRF840
RD1
[20]
R1
12k
R2
12k
T2
BF487
R46
150k
RC5
[24]
AN2
[4]
D3
R5
6k81
R4
221k+
332k
RC4
[23]
R8
10k
T3
BC548
S1
* off-board components
1% or better
5%
analog ground
TP2
0.1uF
400V
R20 100k
1uF
400V
R19
100k
D6
IC2
R44
1k5
R45
3k92
D14
D15
AN3
[5]
L2
330uH
C3
220uF
D2
BYW96E
C4
100uF
400V
R11
12k
R14 121
R15 1k21
100m A
* Z1
* C20
C6
Z2 *
100m A
S2
D4
R12
221k+
332k
R13
6k81
RD4
[27]
R16
10k
T6
BC548
T4
IRF840
RD0
[19]
R9
12k
R10
12k
T5
BF487
R47
150k
RD5
[28]
AN5
[8]
R40
50
C19
* 0.1uF
400V
IC6
78(L)15
in
out
Gnd
C17
10uF
C18
100nF
D16
R43
1k
D17
R42 1k
-15V
IC5
79(L)15
out
in
Gnd
C7
100nF
C8
10uF
R23
2k2
R24
22k
D8
AN1
[3]
R34 = 10k + 681
S3
RD7
[30]
R39
10k
T14
BC548
R33
1k21
R34
R35
3k92
R38
1k21
T13
BC558
IC3
LM741
L5
330uH
filament
C14
470uF
C15
100nF
Z3
1A
IRF1404Z
T18
T8 BD138
D7
C9
470uF
35V
TP3
V-
RC0
[15]
R22
180
R21
10k
T7
BC548
L3
330uH
R27
2k2
D9
AN0
[2]
R28
47k
C13
2n2
T11
BC548
T12
BC548
R36
R37
2 x475
T10 BD138
D10
Vco
S1 ... S3 = HAMLIN HE721A0510
TP4
R26
180
RC3
[18]
R25
10K
T9
BC548
L4
330uH
C10
220uF
63V
C11
33nF
PWM2
[16]
R29
10k
R30
10k
IC4
22nF
C12
IC4 = MC34071
R31
5k6
T15
BC548
R32
10k
RD6
[29]
100nF
C16
T16
BC548
PWM1
[17]
R41
10k
T17
BC558
Version 2.3 15 - 08 - 2011