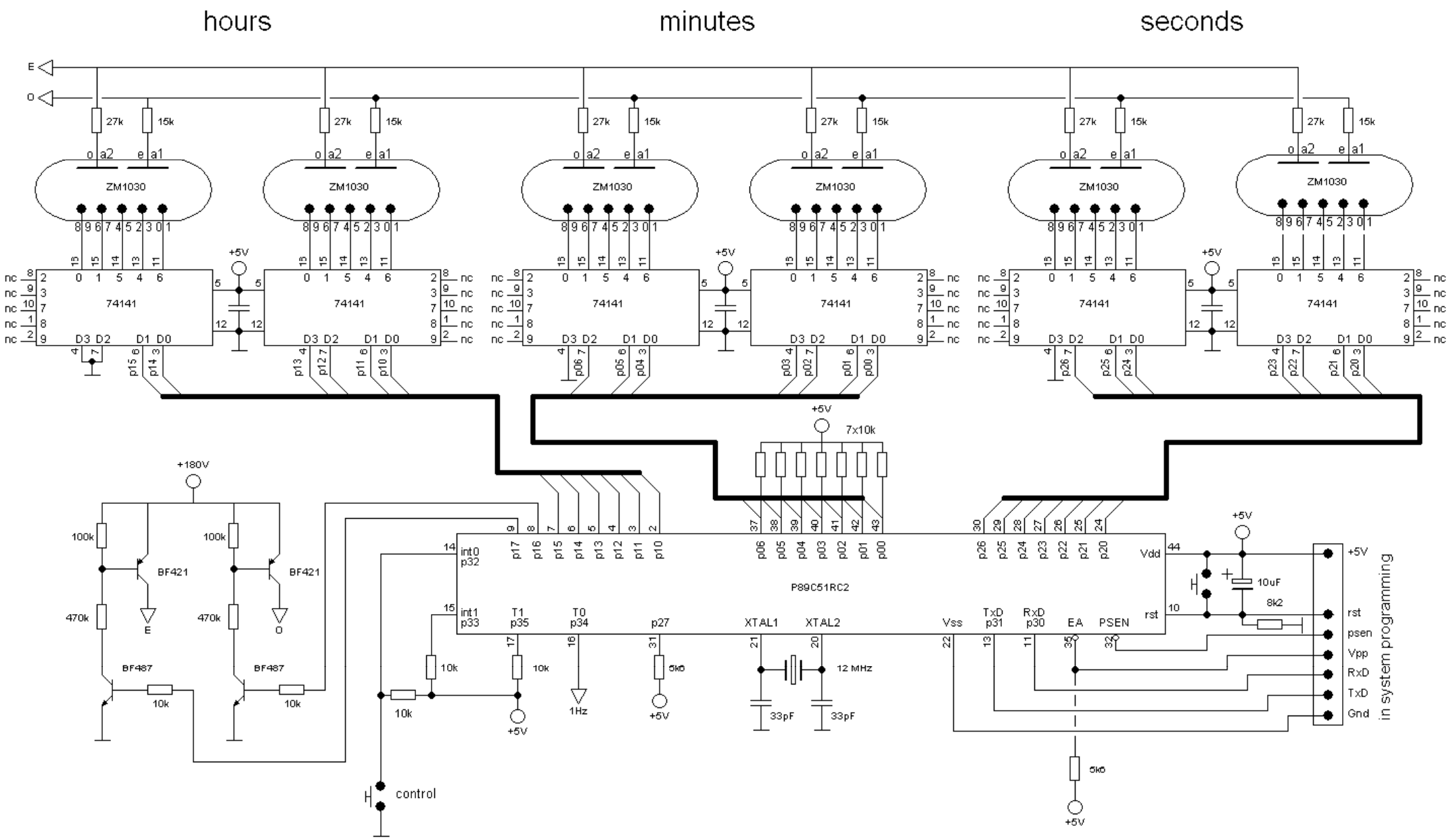
hours
minutes
seconds
E
O
27k
15k
o a2
e a1
ZM1030
74141
+5V
D3 D2 D1 D0
p15 p14 p13 p12 p11 p10 p06 p05 p04 p03 p02 p01 p00 p26 p25 p24 p23 p22 p21 p20
7x10k
+180V
100k
470k
BF421
BF487
10k
control
P89C51RC2
int0 p32
int1 p33
T1 p35
T0 p34
p27
XTAL1
XTAL2
Vss
TxD p31
RxD p30
EA
PSEN
Vdd
rst
12 MHz
33pF
1Hz
5k6
10uF
8k2
psen
Vpp
RxD
TxD
Gnd
in system programming